NOTES: UNLESS OTHERWISE SPECIFIED

1. INTERPRET DRAWING IN ACCORDANCE WITH ANSI Y14.5M-1982.
2. MATERIAL: SEE PART NUMBER BREAKDOWN. (7-01)
3. FINISH: SEE PART NUMBER BREAKDOWN. (7-02)
4. ALL DIMENSIONS APPLY AFTER PLATING.
5. .004[0.10] MAX BLANKING BURR PERMISSIBLE, BURRS NOT TO EXCEED THE SPECIFIED FEATURE TOLERANCE. BURR SIDE FACES HUB. NO BURR WHERE NOTED. (7-03)
6. .005[0.13] MAX RADII & FILLETS PERMISSIBLE ON ALL CORNERS. (7-04)
7. QUANTITY OF PARTS PER REEL: 25,000 ONE BREAK NOT LESS THAN 25% OF REEL CAPACITY. PACKAGE PER AUTOSPLICE SPEC 0049.
8. RECOMMENDED PTH HOLE:
   .0010-.0025" COPPER PLATING PER SIDE:∅.054±.002[1.37±0.05]
   TIN / LEAD FINISHED HOLE: ∅.053±.003[1.35±0.08]

PART NUMBER	"X"	"Y"
7-V1075-002TT	18.43 [.725]	21.61 [.851]
7-V1075-001AA	19.62 [.772]	22.80 [.897]

REV	REVISION RECORD	ECN	BY	APVD	DATE
X8	ADDED P/N INSTANCES PER EWR 108077	-	LD	LD	1/13/2014
A	INITIAL RELEASE PER EWR 102798	503045	JB	JB	12/9/2003
B	CHNG EDGE COIN TO .002[0.05]	503470	JB	JB	8/3/2004
C	ADDED P/N INSTANCES PER EWR 108077	506773	LD	LD	2/11/2014
D	DIM 1-01 TO BREAK EDGE	5068180	LD	LD	5/15/2014

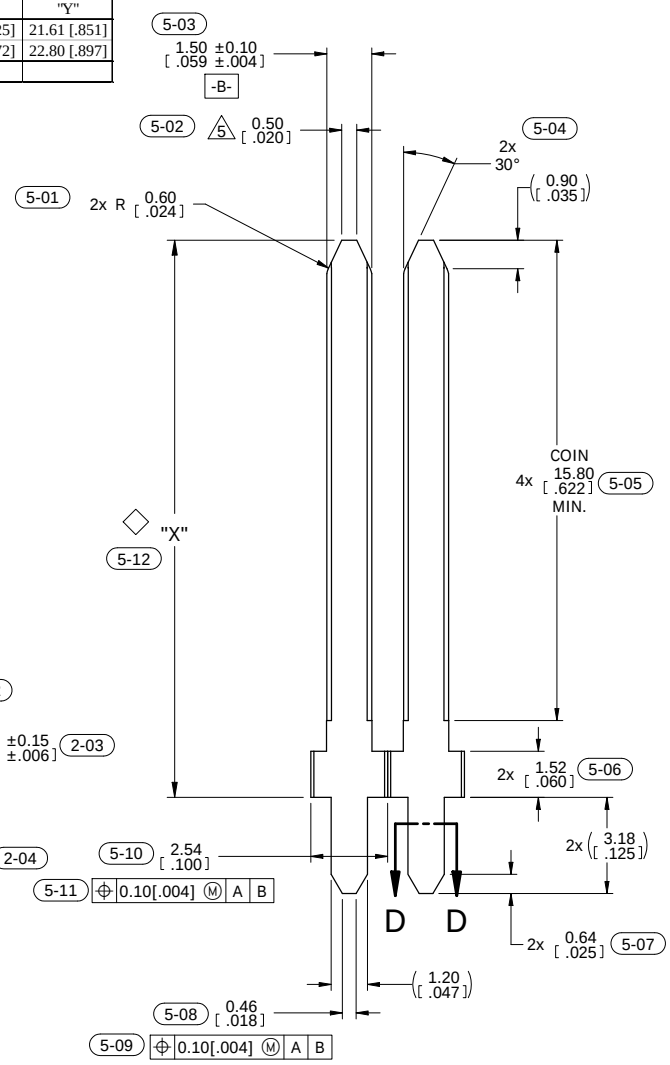

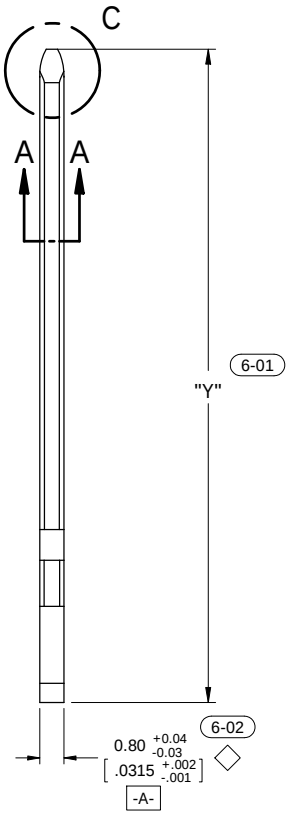

PART NO. / ORDERING CODE

7-V1075-0[][][][]

TYPE
2.8mm VERTICAL TERMINAL

2 VARIATION

MATERIAL
1= C26000 BRASS, ¾ HARD
2=C21000 BRASS, ¾ HARD

FINISH
"LL" - (REMOVED)

TT = .000160"-.000240" MATTE Sn (LEAD FREE) OVER .000080"-.000120" Ni.

AA = .000100"-.000200" MATTE TIN-LEAD OVER .000050"-.000100" Ni.

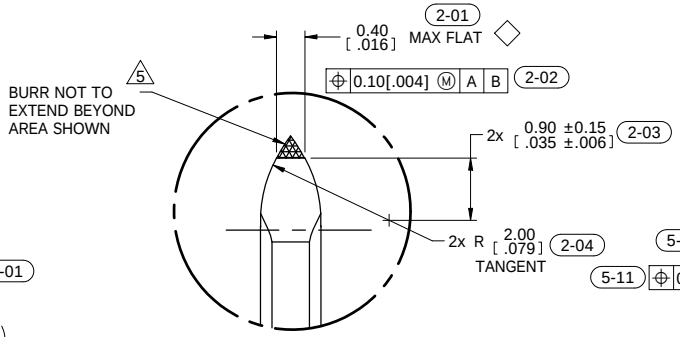

DETAIL C
20:1

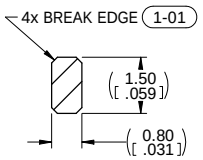

SECTION A-A
10:1

SPECIAL
5 7 REELING ORIENTATION

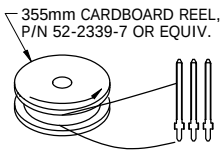

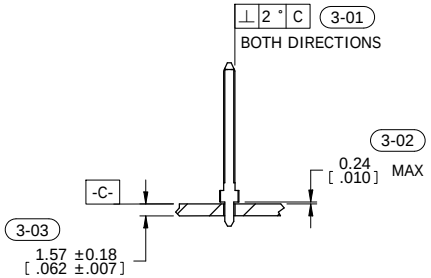

APPLICATION VIEW

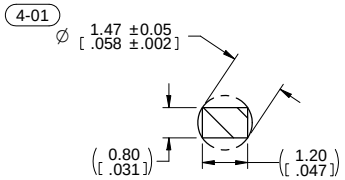

SECTION D-D
10:1

The drawing and the information set forth hereon are the property of Autosplice, Inc. and are to be held in trust and confidence. Publication, disclosure, or use for any purpose not expressly authorizing in writing by Autosplice, Inc. is prohibited.

MATERIAL: 2

FINISH: 3

TOLERANCES UNLESS OTHERWISE SPECIFIED DIMENSIONS IN in [mm]
DECIMAL : .XX = ± .01 [X.X] = ± [0.3] .XXX = ± .005 [X.XX]=± [0.13]
ANGULAR : ± 2°

◇ DENOTES SPECIAL CHARCTERISTIC

CUSTOMER DRAWING

autosplice®
Autosplice, Inc.
10121 Barnes Canyon Rd.
San Diego, CA 92121-2725
858-535-0077

THIRD ANGLE PROJECTION

DRAWN BY: JOE — DATE: 02-10-03
ENGINEERED BY: BIANCA — DATE: 02-10-03

TITLE: VERTICAL TERMINAL, 1.5mm

SIZE: B | FSCM NO.: OAE89 | DRAWING NUMBER: C7-V1075-0[][][][][] | REVISION: D

SCALE: 8:1 | CAD NO. C7-V1075-0[][][][][]d.dft | MODEL NO. 7-V1075-002TT.par | SHEET 1 OF 1