NOTES: UNLESS OTHERWISE SPECIFIED

1. INTERPRET DRAWING IN ACCORDANCE WITH ANSI Y14.5M-1982.
2. MATERIAL: SEE PART NUMBER BREAKDOWN. (6-01)
3. FINISH: SEE PART NUMBER BREAKDOWN. MEASURED IN MIDDLE OF BLADE IN LOCATION SHOWN. (6-02)
4. ALL DIMENSIONS APPLY AFTER PLATING.
5. .004(0.10) MAX BLANKING BURR PERMISSIBLE, BURRS NOT TO EXCEED THE SPECIFIED FEATURE TOLERANCE. BURR SIDE FACES HUB. NO BURR WHERE NOTED. (6-03)
6. .005(0.13) MAX RADII & FILLETS PERMISSIBLE ON ALL CORNERS. (6-04)
7. QUANTITY OF PARTS PER REEL: 25,000 ONE BREAK NOT LESS THAN 25% OF REEL CAPACITY. PACKAGE PER AUTOSPLICE SPEC 0049.
8. RECOMMENDED DRILL HOLE SIZE: ∅.058±.001(1.47±0.03) WITH 1oz. OF COPPER PLATING: ∅.054±.002(1.37±0.05) TIN / LEAD FINISHED HOLE: ∅.053±.002(1.35±0.05)
9. DIMENSION CONTROLLED BY GO/NO GO RING GAGE, MUST APPEAR ON CONTROL PLAN. (6-05)
10. DIMENSION IS ADJUSTABLE BY INSERTION EQUIPMENT TO ACCOMMODATE PCB TOLERANCES.
11. PART MUST BE FREE FROM FABRICATING LUBRICANTS, SOLVENTS AND OTHER IMPURITIES WHICH MAY OCCUR DURING PROCESSING PART.
12. REELING ORIENTATION PER FLAGGED PART NUMBER.

PART NUMBER	"X"	"Y"
7-V1071-002TT	13.85 [.545]	17.03 [.670]
7-V1071-012TT	14.50 [.571]	17.68 [.696]
12 7-V1071-022AA	19.62 [.772]	22.80 [.897]

PART NO. / ORDERING CODE

7-V1071-0[][][][]

TYPE: 2.8mm VERTICAL TERMINAL

VARIATION

2 MATERIAL: 2=C26000 BRASS, ¾ HARD

FINISH: "LL" - (REMOVED)

TT = .000160"-.000240" MATTE Sn (LEAD FREE) OVER .000080"-.000120" Ni.

AA = .000100"-.000200" MATTE TIN-LEAD OVER .000050"-.000100" Ni.

REV	REVISION RECORD	ECN	BY	APVD	DATE
X5	ADDED P/N 7-V1071-022TT PER EWR 108078	-	LD	PVB	1/8/2014
A	INITIAL RELEASE PER EWR 102760	502989	JB	JB	11/4/2003
B	ADDED P/N 7-V1071-022TT PER EWR 108014	506773	LD	PVB	2/11/2014
C	ADDED REELING ORIENTATION PER FLAGGED PART NUMBER	506781	JH	PVB	2/12/2014
D	FLAG 12 REEL SIZE PER EWR 108180	506832	LD	LD	5/15/2014

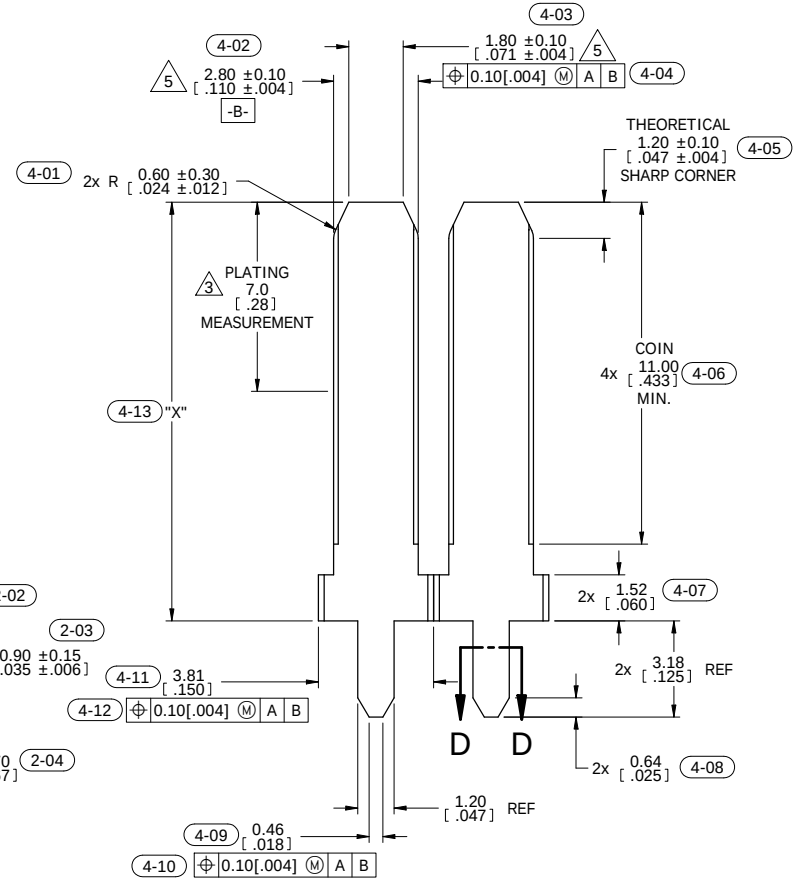

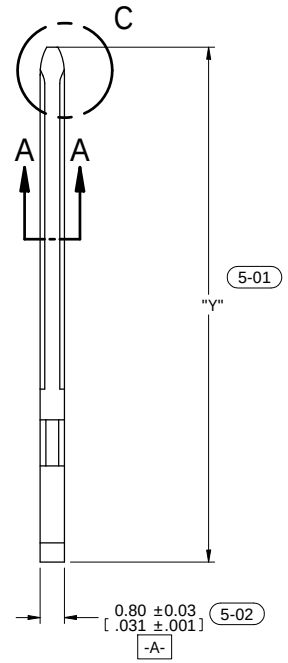

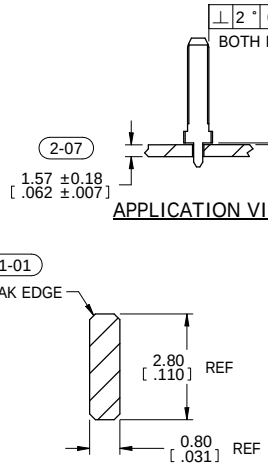

SECTION A-A
10:1

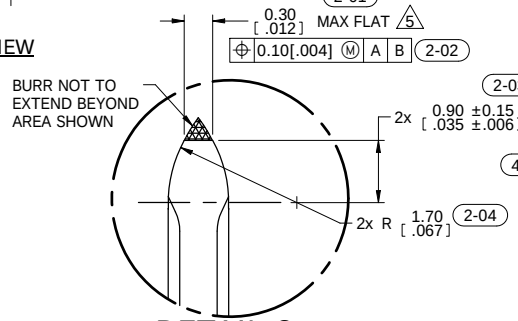

DETAIL C
20:1

5 7 SPECIAL REELING ORIENTATION	12 5 7 SPECIAL REELING ORIENTATION
14" CARDBOARD REEL, P/N 52-2339-7 OR EQUIV.	20" CARDBOARD REEL.

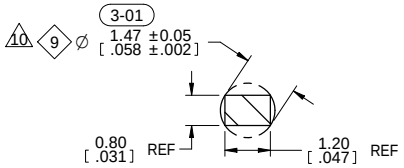

SECTION D-D
10:1

CUSTOMER DRAWING

The drawing and the information set forth hereon are the property of Autosplice, Inc. and are to be held in trust and confidence. Publication, disclosure, or use for any purpose not expressly authorizing in writing by Autosplice, Inc. is prohibited.

MATERIAL: 2

FINISH: 3

TOLERANCES UNLESS OTHERWISE SPECIFIED DIMENSIONS IN mm [in]
DECIMAL: X.X = ± 0.3 [.XX] = ±[.01] X.XX = ± 0.13 [.XXX]= ±[.005]
ANGULAR: ± 2°

◇ DENOTES SPECIAL CHARCTERISTIC

autosplice
Autosplice, Inc.
10121 Barnes Canyon Rd.
San Diego, CA 92121-2725
858-535-0077

THIRD ANGLE PROJECTION

DRAWN BY: JOE — DATE: 10-22-02
ENGINEERED BY: BIANCA — DATE: 10-22-02

TITLE: VERTICAL TERMINAL, 2.8mm

SIZE	FSCM NO.	DRAWING NUMBER	REVISION
C	OAE89	C7-V1071-0[][][][]	D

SCALE 8:1 CAD NO. C7-V1071-0[][][][]d.dft MODEL NO. 7-V1071-0[]2.par SHEET 1 OF 1