NOTES: UNLESS OTHERWISE SPECIFIED
1. INTERPRET DRAWING IN ACCORDANCE WITH ASME Y14.5-1994
2. PARTS TO BE PACKAGED IN TAPE & REEL PER EIA STD-481
3. PICK-UP TAB DEFLECTS UPON INSERTION OF THE SHIELD.

PART NUMBER BREAKDOWN

7-V2004 - 1 [] [] [][]

RFI CLIP

PACKAGING

VARIATION

CODE	SHIELD THKNS
1	.014±.002 [0.36±0.05]
2	.019±.002 [0.48±0.05]

PLATING CODE

AA= PREPLATED .000120" [0.00305] MIN Sn/Pb OVER .000050" [0.00127] MIN Ni

TT= PREPLATED .000120" [0.00305] MIN MATTE Sn OVER .000050" [0.00127] MIN Ni

MAT'L DESIGNATION

CODE	MATERIAL
5	COPPER ALLOY

REV	REVISION RECORD	ECN	BY	APVD	DATE
F	CHANGE PAD SIZE	16072	JOE	JB	01/14/99
G	PER EWR100642	500811	TM	JB	08/29/00
H	CHG QTY PER REEL TO 2,000	501002	JB	JB	10/18/00
J	ADDED "TT" PER EWR103508	503111	BILL	JB	1/20/2004
K	ADDED NEW PART PER EWR103913	503390	BILL	JB	6/3/2004
L	REVISE P/N TABLE EWR105512	505010	HR	PVB	6/20/2007
M	ADD NEW MAT'L PER EWR105673	505247	HR	PVB	1/15/2008
N	REVISE NOTE PER EWR106134	505531	HR	PVB	9/8/2008
P	ADDED .155 MIN SHIELD HEIGHT	505554	DJA	HR	9/24/2008
R	REMOVED MAT'L CODE 0 / EWR 107290	506271	RAB	PVB	7/7/2011

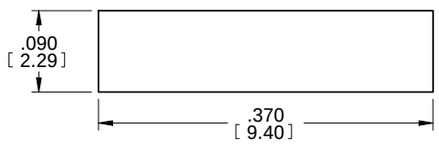

RECOMMENDED PAD SIZE

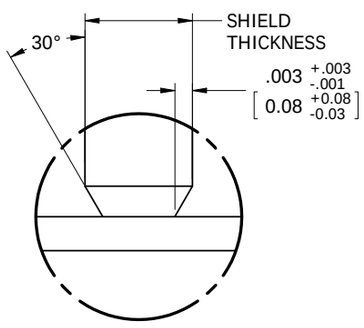

DETAIL A
EDGE FINISH RECOMMENDATION

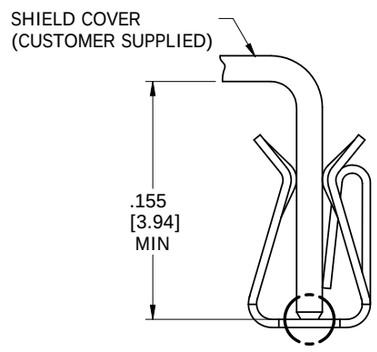

A

APPLICATION VIEW

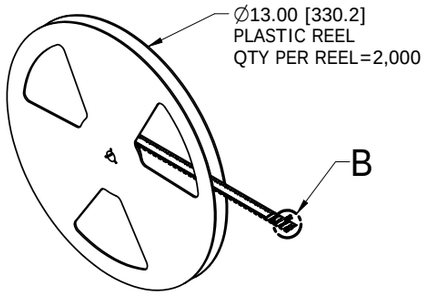

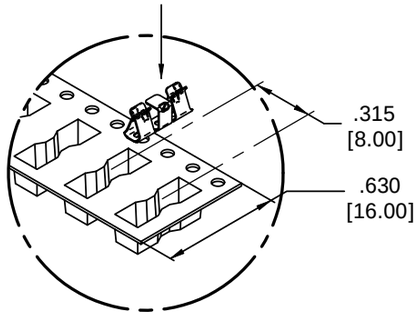

DETAIL B

TAPE & REEL PACKAGING

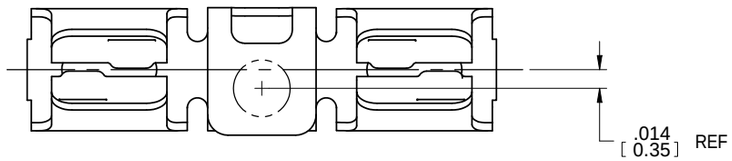

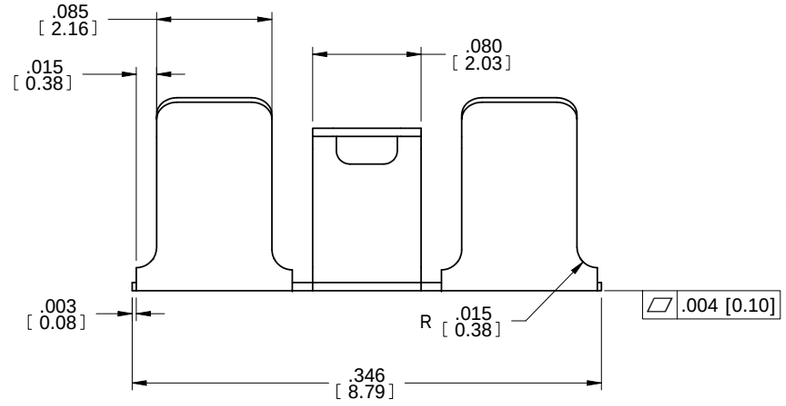

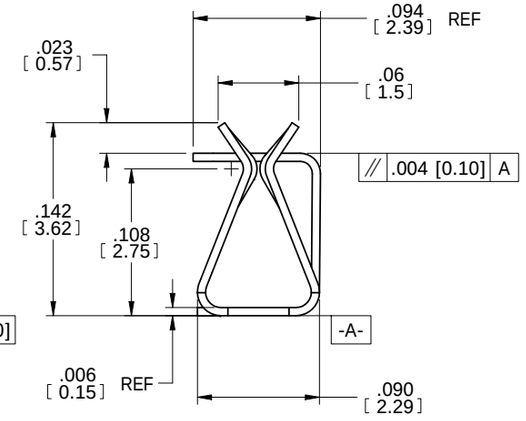

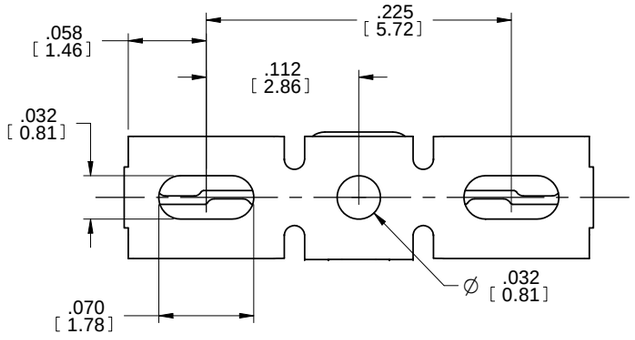

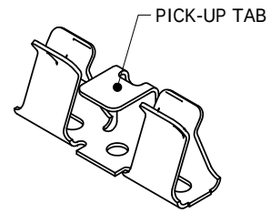

CUSTOMER DRAWING

The drawing and the information set forth hereon are the property of Autosplice, Inc. and are to be held in trust and confidence. Publication, disclosure, or use for any purpose not expressly authorizing in writing by Autosplice, Inc. is prohibited.

MATERIAL:

FINISH:

TOLERANCES UNLESS OTHERWISE SPECIFIED DIMENSIONS IN INCHES [mm]
DECIMAL : .XX = ± .02 [X.X] ± [0.5] .XXX = ± .010 [X.XX] ± [0.25]
ANGULAR : ± 2°
DENOTES SPECIAL CHARACTERISTIC

autosplice®
Autosplice, Inc.
10121 Barnes Canyon Rd.
San Diego, CA 92121-2725
858-535-0077

THIRD ANGLE PROJECTION

DRAWN BY	JOE	DATE 3/20/97
ENGINEERED BY	JB	DATE 3/20/97

TITLE: SMT MIDI RFI CLIP

SIZE	FSCM NO.	DRAWING NUMBER	REVISION
C	OAE89	C7-V2004-1[][][][][]	R

SCALE 12:1 | CAD NO. C7-v2004-1[][][][]R.dft | MODEL NO. 7-v2004.psm | SHEET 1 OF 1